CLICS®

Made in Belgium

4+

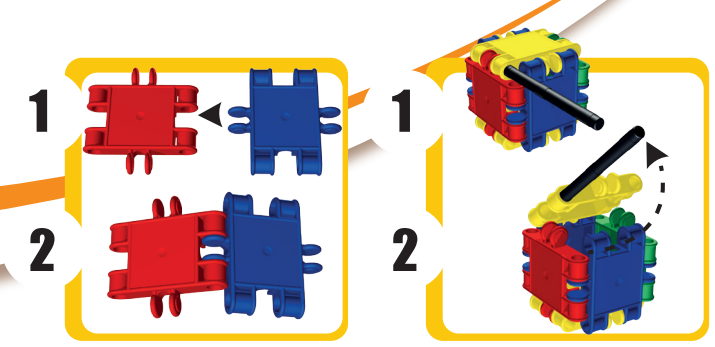

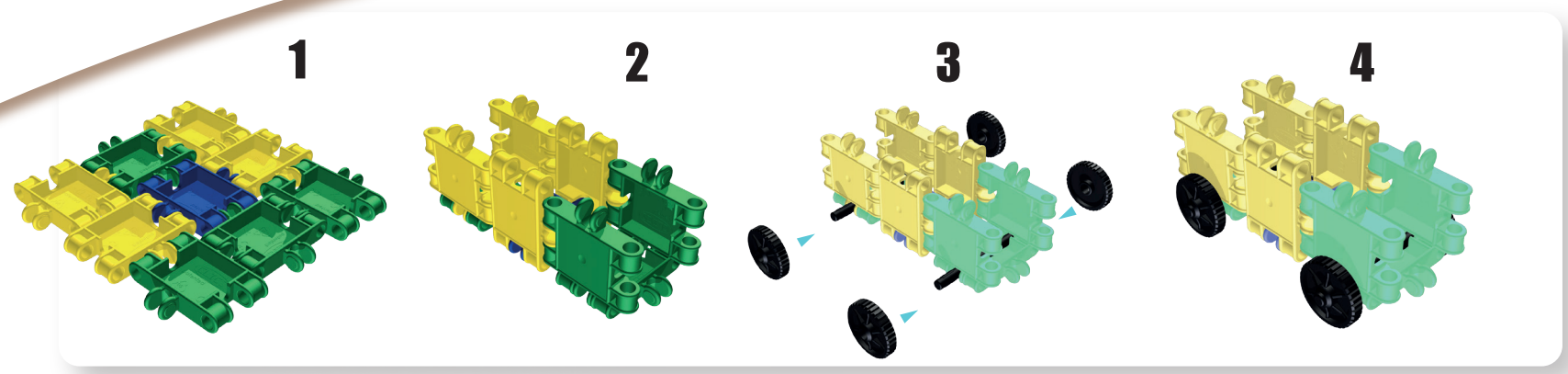

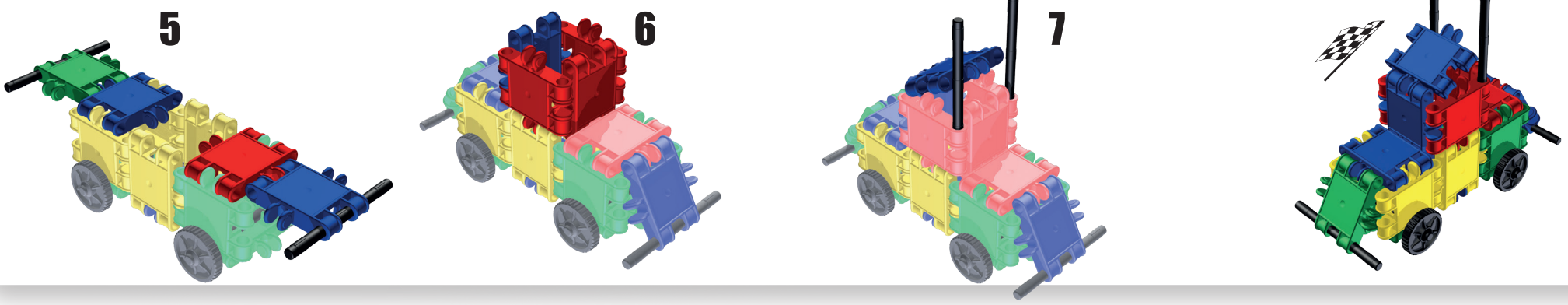

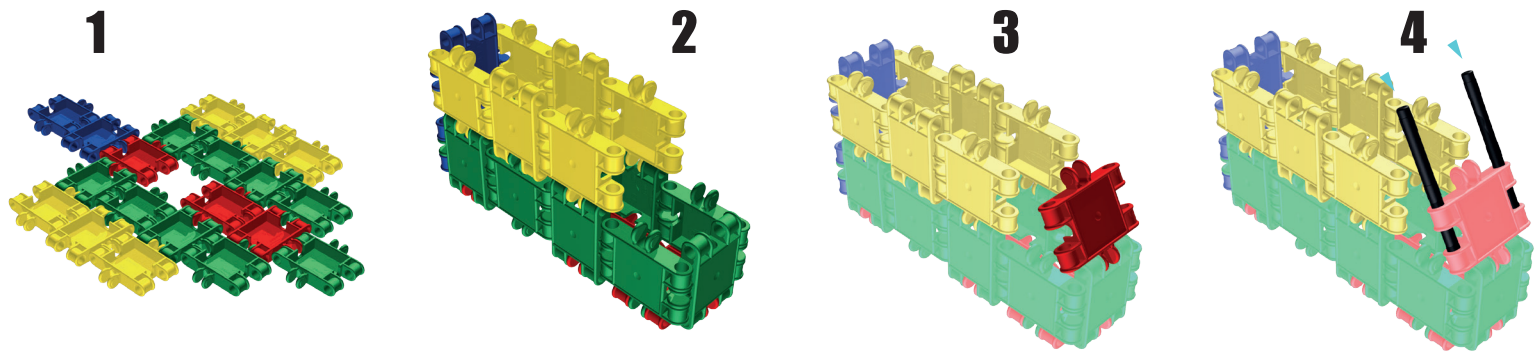

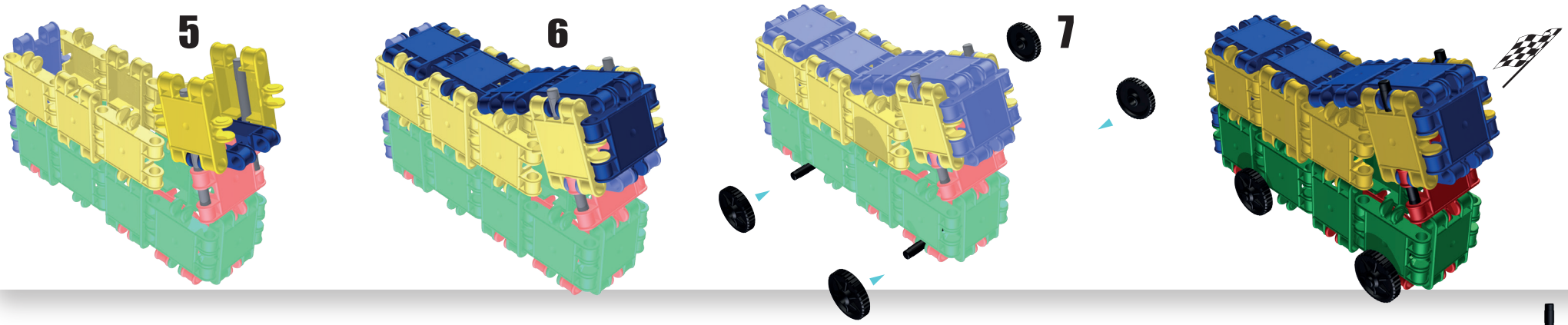

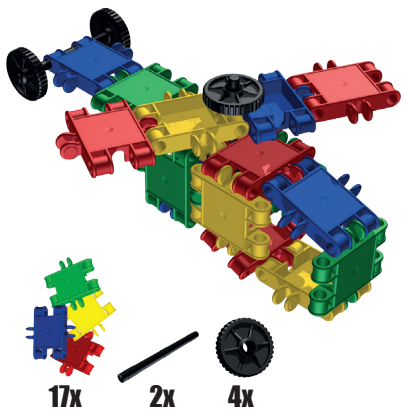

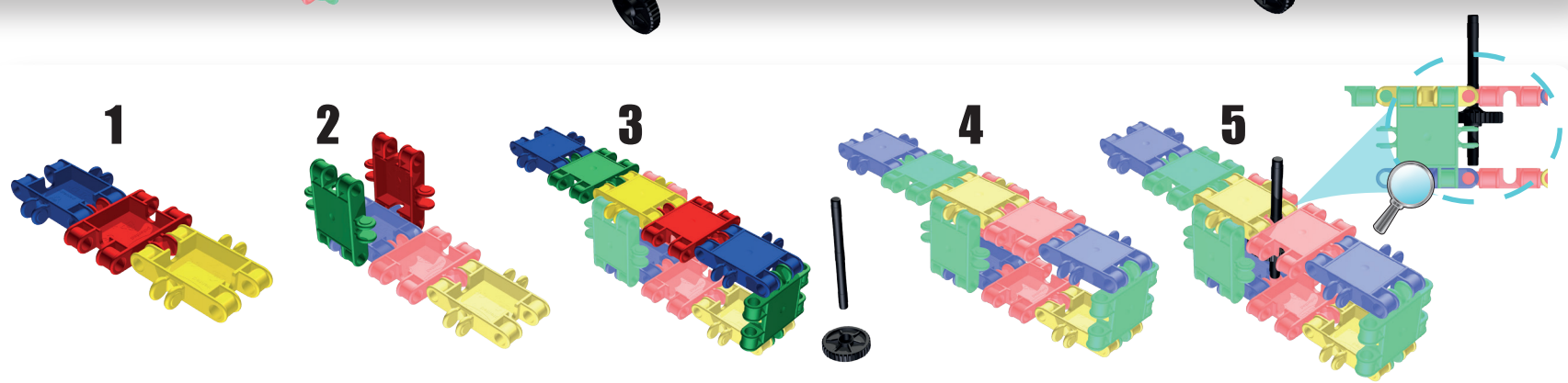

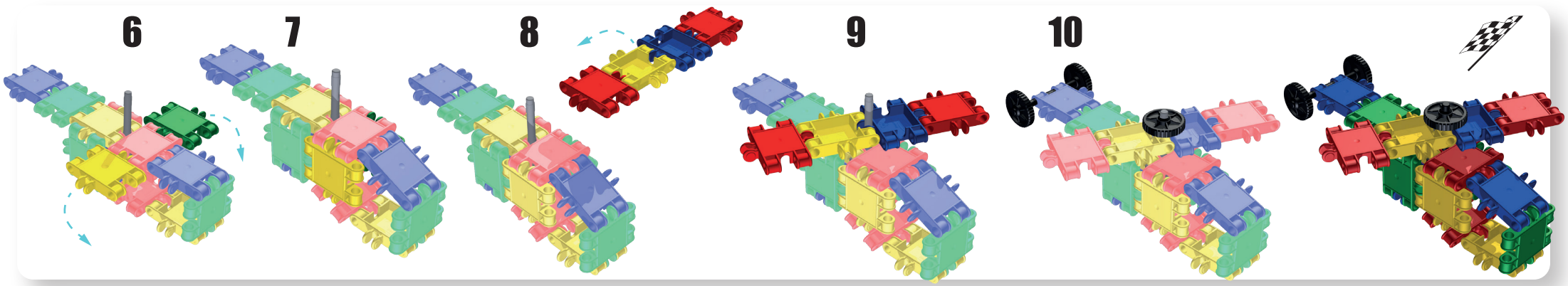

⚠ WARNING : CHOKING HAZARD--Small parts. Not for children under 3 yrs.

clicstoys.com